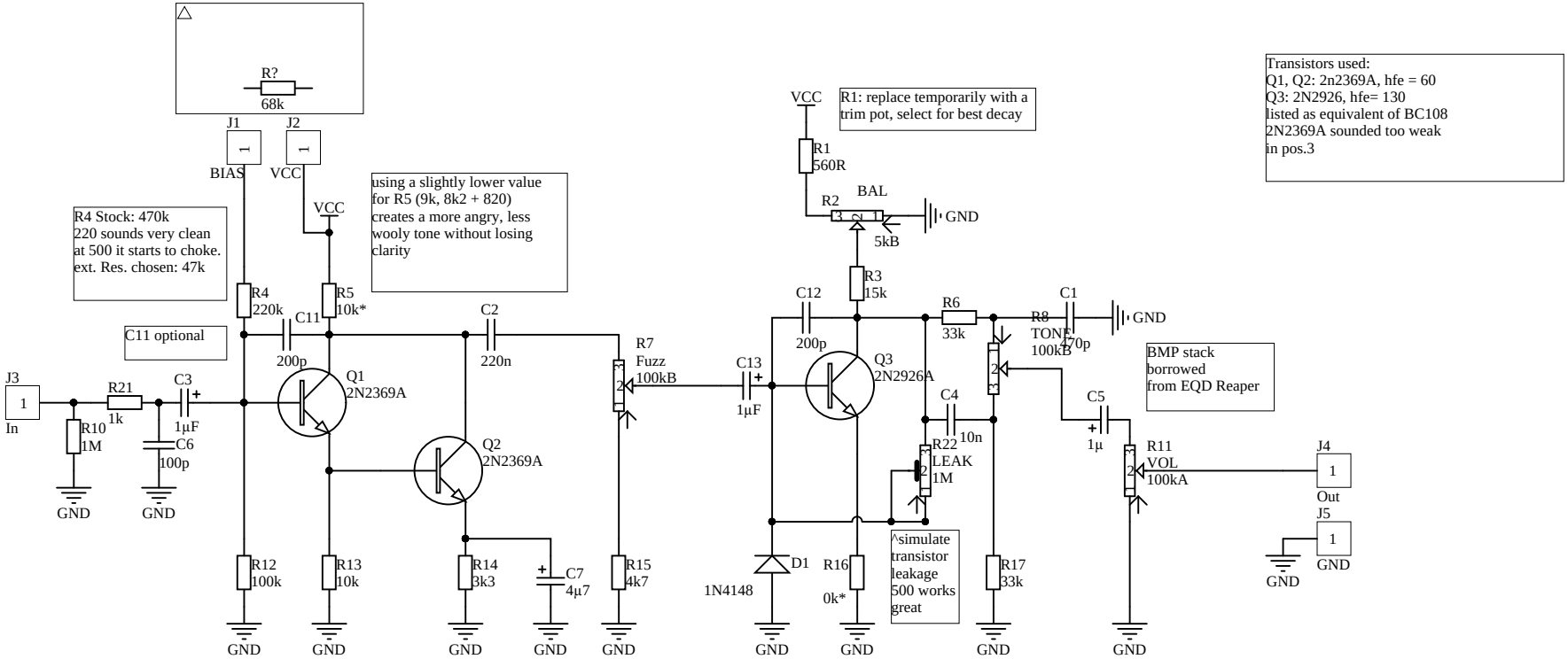

Biasing Procedure:
---
* Remove Q3 first. No C-B caps.
* adjust R22 leakage pot to zero. This will feed the signal to the output.
* leave R5 at 10k, adjust R4 for best tone and decay.
* re-install Q3. Set R22 midway.
* Replace R1 with a 10 trim pot temporarily or install a trim pot permanent.
* Max balance pot
* trim 10 pot until nice distortion texture and decay. Check BAL pot for range.
* measure R1 and re-place fixed resistor of suitable value.
* play with R5, lower slightly for a grittier tone.
* find a suitable setting for R4, both interact somewhat.
* if Q3 is not sounding to your like (too much gain), you may add some emitter resistance
* add C12 to taste

bingo, you have a great sounding overdrive with great sustain. From here on you can do things to make it more nasty 8-)

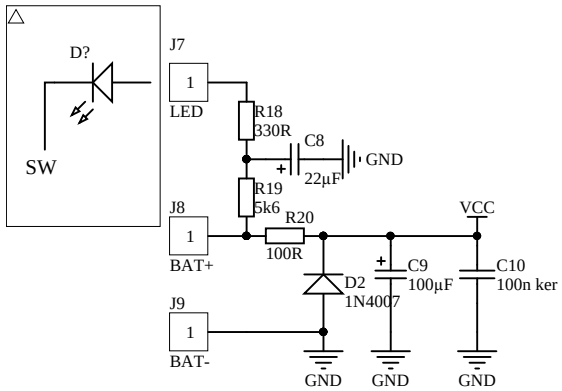

Bypass switching not shown.
use your own favorite!

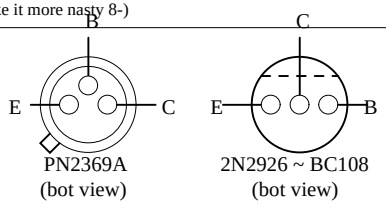

Permission refused for serving / posting
this file from any site other than
http://aquataur.hilpold.net/aquataur/

Title	Silicon Tone Bender Mk.III	
Size A4	Number with BMP style tone control	Revision 1.0
Date: 02.02.2020	Sheet of 1/1	
File: D:\projekte\..\mark3.SchDoc	Drawn By: HG	