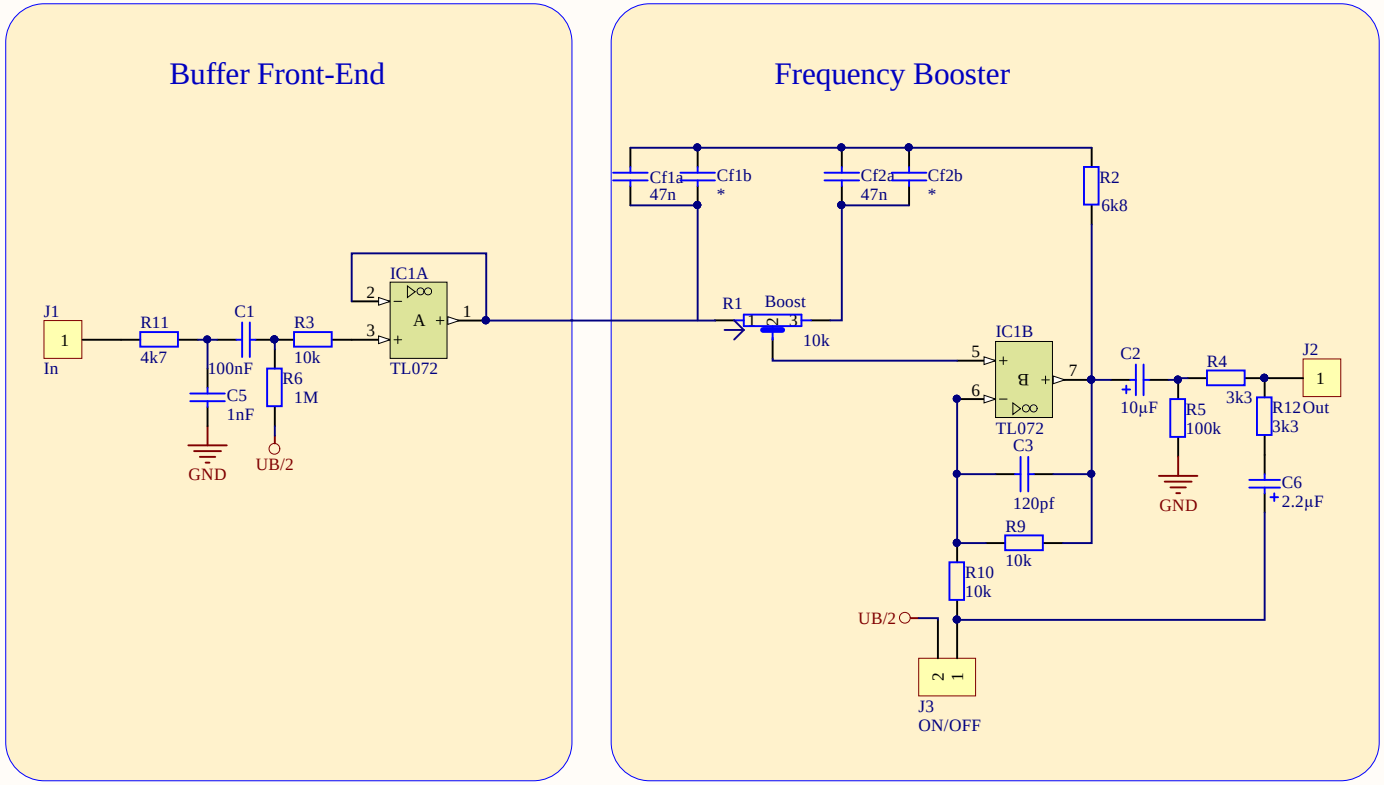

opa=TL072, LF353
or other j-fet type

C1=C2
220nF = 90 Hz
100nF = 200 Hz
68nF =270 Hz
57nF = 320Hz
47nF = 400 Hz
22 nF = 1kHz
10 nF = 2kHz

R12 via C6 compensates
for the gain of two IC1B introduces. I
J3=open (bypass mode), gain
reduction is inactive.

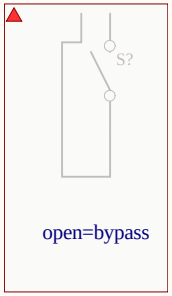

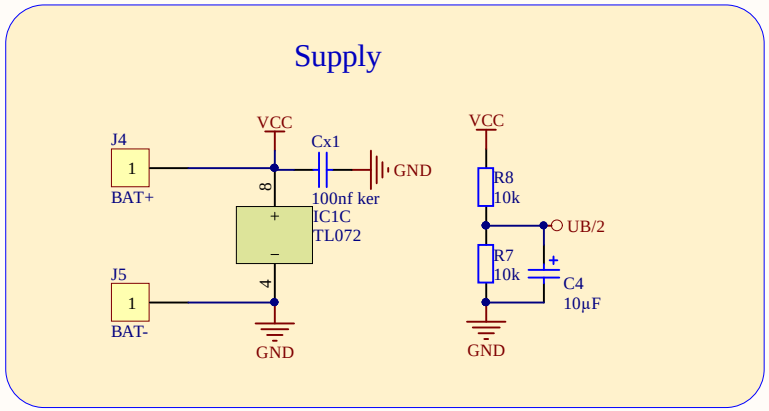

This schematic contains elements of a schematic published by Craig Anderton in his book "DIY projects for musicians" and of Vivek Mehta published on diystompboxes. Please consult the accompanying text for more information.

(c) Aquataur Musik 2024
Permission refused for serving / posting this file from any site other than me.aquataur.guru

Note:
for a stand-alone version,
proper power conditioning measures
and LED drive should be added as
shown in SRB-EQ.

Title	***adapted Anderton #10 Frequency Booster***	
Size: A4	Number: 400 Hz Peak, add-on version	Revision: 1.1
Date: 12.06.2024	Sheet 1/1 of 1	
File: D:\projekte\..\anderton freq booster.SchDoc	Drawn By: HG	